EM5000 air differential pressure gauge

Installation, operation and metric mounting drawings | English edition

1. Read before use

EM5000 is a miniature mechanical differential pressure gauge. Read these instructions before use. It is intended for air and compatible noncorrosive gases.

2. Applications and construction

Applications include fan and blower pressure, filter resistance, air velocity, furnace draft, orifice-plate differential pressure, bubbler level, pneumatic sensing associated with fluid amplifiers or hydraulic systems, combustion air/gas ratio and automatic-valve control, and blood-pressure or respiratory-pressure monitoring in medical equipment. Listed industries include healthcare, microelectronics, aerospace, environmental engineering, biotechnology, pharmaceuticals, building automation, HVAC, food and beverage, and precision electronics. These examples do not authorize direct liquid service.

The magnetic helix mechanism avoids gear-contact friction and requires no liquid fill. It provides responsive pointer movement with resistance to vibration, shock and overload. Positive, negative or differential pressure can be measured. The compact housing is molded from reinforced nylon and the lens from polycarbonate. A blow-out membrane associated with the diaphragm provides overpressure relief.

3. Physical data in the original operating manual

Parameter	Specification
Dimensions	2-29/32in (73.82mm) × 2-7/16in (61.93mm)
Weight	6oz (170g)
Total pressure, continuous	30psig (approximately 2.067bar) to either pressure connection
Total pressure, surge	50psig (approximately 3.445bar)
Ambient temperature	20°F to 120°F (−6.7°C to 49°C)
Accuracy	±5%FS at 70°F (21.1°C)
Standard connection	Barbed fitting for 3/16in inside-diameter tubing
Optional connection	1/8in NPT male pressure connection
Housing / lens	Reinforced nylon / polycarbonate
Finish	Black
Pa range selections	0–125, 0–250, 0–500, 0–1000, 0–2500 and 0–3000Pa
Original manual accessories	Two 4-40 × 1-5/8in mounting studs, two 4-40 hex nuts, one 0.050in hex key and one panel-mounting bracket

The 2024 metric drawings specify M3 hardware and supersede the older fastener dimensions for that construction. Their mounting dimensions are reproduced separately on pages 4–5.

Original outline and installation

4. Reference outline

The original manual uses the following front/side outline. The English-site numeric drawing reproduces the same dimension callouts.

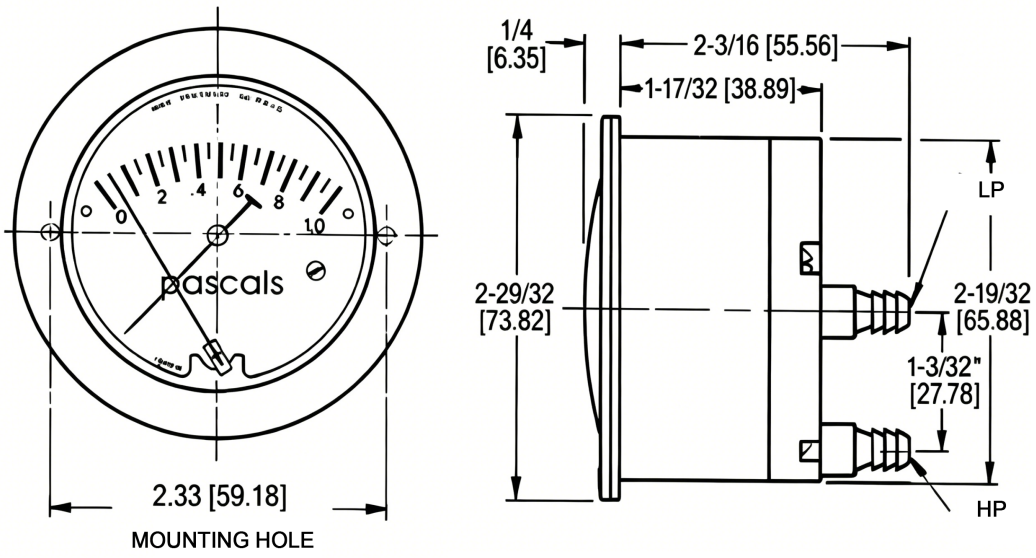

Outline callouts: 1/4in (6.35mm), 2-3/16in (55.56mm), 1-17/32in (38.89mm), 2-29/32in (73.82mm), 2-19/32in (65.88mm), 1-3/32in (27.78mm), 2.33in (59.18mm) mounting centers, and 1-3/64in (26.59mm) mounting-hole spacing for the optional 1/8in NPT connection. Upper port: LP / low pressure. Lower port: HP / high pressure.

5. Location and orientation

Choose a location free from excessive vibration. The original manual specifies an ambient temperature between 20°F and 120°F (−6.7°C to 49°C). Long sensing lines do not change static accuracy but increase damping and response time. For excessive oscillation caused by pulsation or vibration, additional damping is available from the manufacturer.

The gauge is calibrated and zeroed vertically. Re-zero it whenever its orientation changes. Ranges below 5inH_2O, or the equivalent, must remain vertical unless a different calibration was specified when ordering.

6. Original mounting instructions

Surface mounting: Drill two 5/32in (3.97mm) mounting holes on a horizontal line, 2-1/3in (59.26mm) apart. Drill two 7/16in (11.11mm) pressure-port clearance holes on the vertical line at the 1-1/32in (26.19mm) spacing stated in the original instructions. Insert the mounting studs into the rear of the gauge, pass them through the panel and secure the supplied nuts. Keep the slot near the right mounting hole clear; it provides overpressure relief.

Panel mounting: Cut a 2-5/8in opening. Insert the gauge, fit the mounting bracket behind the panel and tighten the nuts. Use the separate 2024 metric drawing when the supplied gauge has M3 hardware; do not mix the two mounting patterns.

Zero adjustment, operation and checks

7. Set zero

After installation and before operation, set the gauge to zero if necessary. Hold the housing with one hand and turn the front cover counterclockwise with the other. A thin rubber sheet can improve grip if the cover is difficult to loosen. The adjustment screw is below the ZERO mark on the front scale plate. Use the supplied hex key to bring the pointer to zero.

Vent both pressure ports and keep the gauge in its final installed position during zero adjustment. Replace the cover when finished.

8. Measure pressure

Mode	Pressure connection
Positive pressure	Connect the source to HI and vent LO.
Negative pressure	Connect the vacuum source to LO and vent HI.
Differential pressure	Connect the higher pressure to HI and the lower pressure to LO.

When installing the optional 1/8in NPT connections, avoid overtightening, which can damage the instrument.

9. Calibration check

Use a reference gauge or manometer with known accuracy and pressure range. Connect the high-pressure ports of the test gauge and reference to a three-way tee using rubber or vinyl tubing. Slowly apply pressure through the third branch, wait several seconds for the pressure to equalize and the reading to stabilize, then compare the instruments. If the error exceeds the rated accuracy, return the gauge for recalibration.

10. Maintenance

No lubrication or scheduled maintenance is required. Keep the case and cover clean. Occasionally disconnect the pressure lines, vent both sides and check or reset zero using the procedure above.

11. Original manual and updated product data

The operating manual gives ±5%FS in its physical-data table, although a nearby illustration caption says 4%FS at 21°C. The ±5% specification is retained here, consistent with the current technical table. The current Chinese product page lists −7°C to 60°C operation and additional 0–25mmH_2O / 0–50mmH_2O scales. It also lists −68kPa to 103kPa rated pressure, whereas both the dedicated manual and the signed 2024 drawing give 30psig continuous and 50psig surge. Apply the rating for the supplied construction.

The original manual’s 4-40 studs and nuts are distinct from the M3 hardware in the 2024 drawings. These documents describe different mounting revisions rather than interchangeable screws.

Source publisher

ELECALL trademark holder and manufacturer: Yueqing ELECALL Electric Co., Ltd. No. 246 Weishi Road, Yueqing Economic Development Zone, Zhejiang, China. Chinese service telephone: 4006-111-323. English footer telephone: +86 (577) 62792850. Website: www.elecall.cn. Technical changes may be made without notice; consult the supplied product documentation.

2024 metric structural drawing

Drawing ELE-2024-08-03-001 | 3 August 2024 | Dimensions in mm

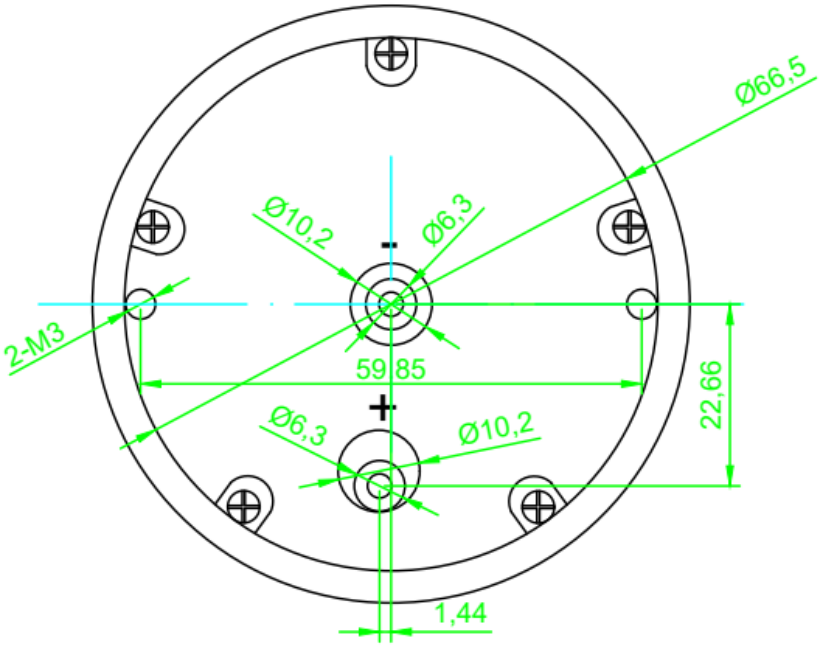

Rear of gauge: “−” marks the upper low-pressure port; “+” marks the lower high-pressure port.

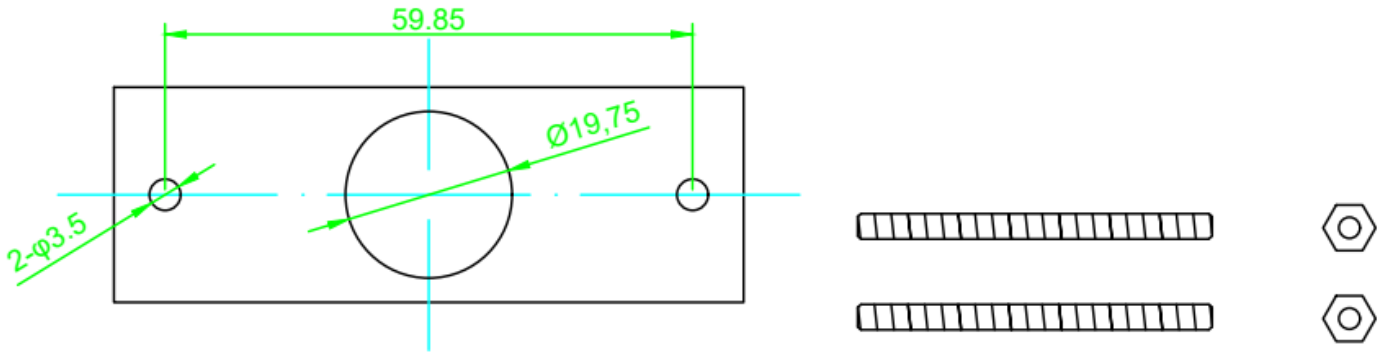

Included parts: one flush-mounting bracket and one mounting screw/nut set.

Drawing notes

1. EM5000 spans include 125, 250, 500, 1000, 2500 and 3000Pa. Their external dimensions and installation methods are the same.
2. Housing: reinforced filled nylon. Lens: polycarbonate.
3. Rated total pressure: 50psig (3.445bar) surge; 30psig (2.067bar) continuous at the pressure connections.
4. Included hardware: two M3×40mm screws, two M3 nuts and one flush-mounting bracket.

Numeric callouts retained: rear Ø66.5, two M3 holes on 59.85 centers, pressure-port diameters Ø10.2 and Ø6.3, vertical port spacing 22.66 and lateral offset 1.44. Bracket: two Ø3.5 holes on 59.85 centers and Ø19.75 center opening.

Title block: EM5000 micro differential pressure gauge, outline structural drawing, sheet 1 of 2. Design: Chen Xin. Checked: Huang Jiansheng. Responsible designer and approver: Xu Xiaonan. Standard review: Zhao Bin. Process review: Ruan Jiang. Company: Yueqing ELECALL Electric Co., Ltd. The revision, signature, weight and scale cells contain no additional technical values.

2024 metric installation drawing

Drawing ELE-2024-08-03-002 | 3 August 2024 | Dimensions in mm

12. Flush mounting

Check the supplied hardware: two M3×40mm screws, two M3 nuts and one flush-mount bracket.
1. Cut an Ø66.5mm opening in the mounting panel and remove burrs.
2. Insert the gauge. Pass the bracket center opening over the pressure port marked “−”.
3. Fit a nut to each screw, insert the two screws in the mounting holes and tighten both nuts after securing the instrument.
4. Installation is complete.

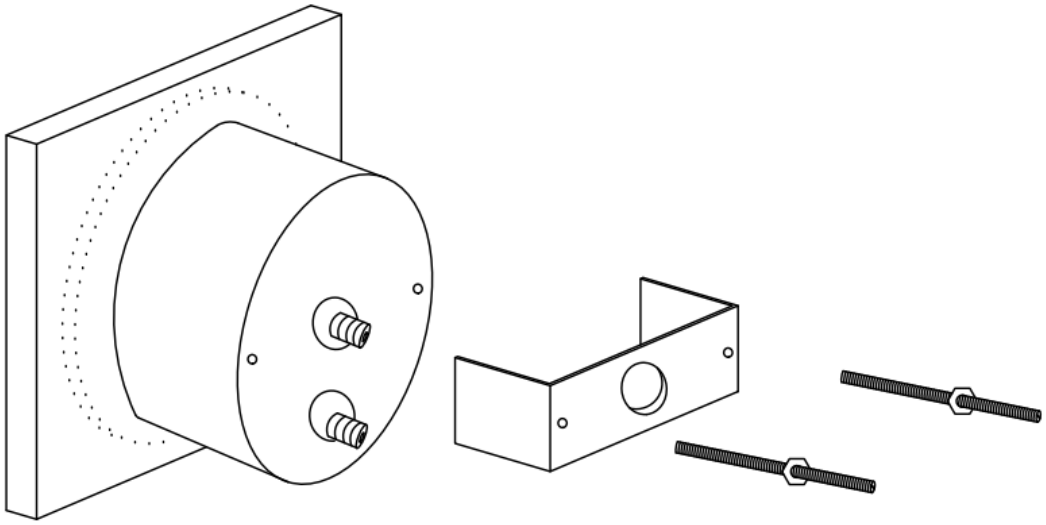

13. Surface mounting

Check the same supplied hardware before beginning.
1. Drill two Ø10.5mm pressure-port clearance holes and two Ø4mm mounting holes, using the structural drawing for their positions. Remove burrs.
2. Pass the pressure ports through the clearance holes and align the gauge vertically.
3. Fit a nut to each M3×40mm screw, insert the screws in the two mounting holes and tighten the nuts after securing the gauge.
4. Installation is complete.

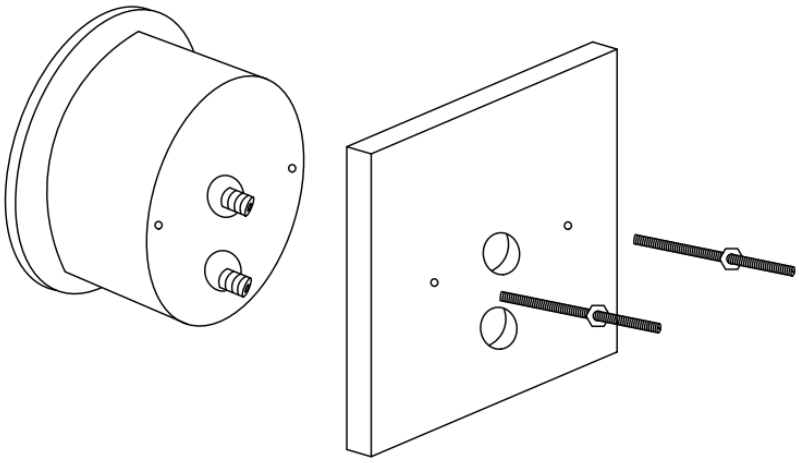

Drawing records and configuration notes

14. Installation drawing record

Title: EM5000 micro differential pressure gauge, installation diagram. Drawing number: ELE-2024-08-03-002. Date: 3 August 2024. Sheet 2 of 2. Design: Chen Xin. Checked: Huang Jiansheng. Responsible designer and approver: Xu Xiaonan. Standard review: Zhao Bin. Process review: Ruan Jiang. Company: Yueqing ELECALL Electric Co., Ltd. The original-drawing number, base-drawing number and revision cells are blank.

15. Pressure, temperature and mounting conditions

Pressure: 30psig, approximately 2.067bar, continuous pressure; 50psig, approximately 3.445bar, surge pressure.

Temperature: The original operating-manual configuration is rated -6.7–49°C. The additional current configuration is rated -7–60°C. Use the temperature limits for the supplied version.

Mounting hardware: Use the supplied M3 nuts with the matching M3 screws for the metric construction.

Bracket center hole: Ø19.75mm. Pressure-port clearance holes serve the pneumatic connections. EM5000 requires no electrical power.

Mounting revisions: The earlier outline specifies 59.18mm mounting centers and 27.78mm pressure-port spacing; the earlier installation instructions specify 59.26mm and 26.19mm. Check the supplied gauge before drilling. The 2024 metric construction uses 59.85mm mounting centers, 22.66mm vertical port spacing and 1.44mm lateral offset. Use the drawing corresponding to the supplied gauge.

Hole and tool sizes: A 7/16in clearance hole is 11.11mm. The 0.050in hex key is approximately 1.27mm. Instrument accuracy is ±5%FS.

Terminology reference: Dwyer, Bulletin A-36, Series 2-5000 Minihelic II Differential Pressure Gage, https://assets.dwyeromega.com/manuals-do/2_5000_Instruction_Manual.pdf

This translation includes both pages of the Chinese operating manual and both separate 2024 engineering drawings. Repeated descriptions are consolidated; all installation steps, dimensions, materials, pressure ratings, accessory specifications, operating checks and maintenance instructions are retained.